A Phase Variable Model of Flyback Switching Converters Based on Numerical Magnetic Field Analysis Coupled With External Circuits

Jiaxin Chen[1,2], Youguang Guo[2] and Jianguo Zhu[2]
[1]College of Electromechanical Engineering, Donghua University, China
[2]Faculty of Engineering, University of Technology, Sydney, Australia

This paper presents a fast and accurate phase variable model of flyback switching converters. A modified dynamic circuit model of high frequency transformer, capable of including the effect of all types of core loss, is adopted. The dynamic differential inductances of the transformer are obtained based on nonlinear finite element magnetic field analysis. The developed phase variable model is implemented in Matlab/Simulink through variable inductance and variable core loss equivalent resistance to account for the winding current and voltage dependence. With this model, anomalous loss and natural output curve of flyback switching converters are investigated. This model has been applied to analyze an existing flyback converter and simulation results prove its practical merit and high effectiveness.

Key Words: Phase variable model, Flyback switching converter, Anomalous loss, Differential inductance, Finite element analysis.

1. Introduction

Because of its simpler structure than other types of switching mode converter, the flyback converter is commonly used as small power converter. To predict, assess and optimize the performance of flyback converters, a generalized dynamic simulation model for the behavior of flyback converters would always be useful. The flyback converter is composed of a transformer and external circuits, so the key issues for investigating its performance are the transformer modeling and the coupling between the transformer and external circuits.

As an accurate model, the transformer model must account for the nonlinear inductance and influence of all kinds of magnetic core loss. A generalized dynamic ladder network circuit model of high frequency transformer has been introduced in [1], [2] and the circuit model with one level of ladder network is shown in Fig. 1. Based on this model, this paper presents a more suitable model for the transformer as shown in Fig. 2. Due to the nonlinear magnetization property of soft magnetic cores, the differential inductance, L_m, varies with winding current, is obtained by nonlinear FE analysis. Using this winding current dependent parameter, a phase variable model of flyback converter is developed.

Correspondence: Youguang Guo, Faculty of Engineering, University of Technology, Sydney, PO Box 123, Broadway, NSW 2007, Australia,
email: youguang@eng.uts.edu.au.

In order to connect the transformer model and external circuits, the port voltage of each winding of transformer must be measured. A hybrid simulation model with two levels is built here. An adjustable differential inductance component is developed to represent the inductance dependence on the winding current. An adjustable core loss equivalent resistance component is also developed to represent the resistance dependence on the voltage across the inductance, L_m. By running this model in the Simulink environment, the comprehensive performance of a flyback switching converter could be obtained.

2. Modified Dynamic Model of High Frequency Transformer in Flyback Converters

2.1 Modified circuit model of transformer

The model shown in Fig. 1 is capable of considering hysteresis loss, eddy current loss, anomalous loss and distributed capacitance. In the figure, R_a is the nonlinear equivalent resistance of anomalous loss, R_e is the equivalent resistance of eddy current loss, L_m is the nonlinear differential inductance which has accounted for the effect of hysteresis loss, R_P and L_{PS} are the resistance and leakage inductance of the primary winding, R'_{2s} and L'_{2ss} are the equivalent resistance and equivalent leakage inductance of the secondary winding, respectively. The stray capacitance, C_{str}, can be obtained by experiment [2].

Since the soft magnetic cores used in flyback converters, such as TDK-PC40, have high electrical resistivity and narrow B-H hysteresis limiting loop, the skin effect, hysteresis loss and eddy current loss can be omitted. The main core loss is the anomalous loss, and the level number of the ladder circuit can be decreased to one as shown in Fig. 2. Considering the RCD (resistor, capacitor and diode) snub circuit in flyback converter has the similar function as the stray capacitance and the output power of the third winding is small, a modified dynamic circuit model of flyback switching converters is built and shown in Fig. 2.

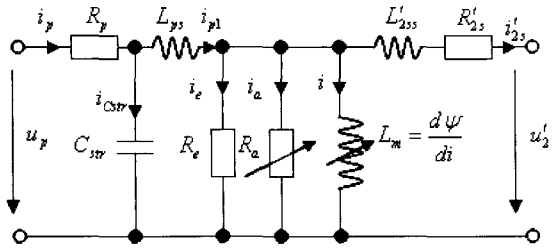

Fig. 1. Dynamic circuit model of transformer

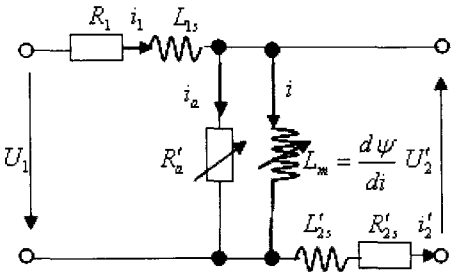

Fig. 2. Modified dynamic circuit model

2.2 Differential inductance

The winding differential inductances are calculated by the following steps: (1) For a given winding current, i, a non-linear field analysis is carried out to find the flux density in the core; (2) When the flux densities in two consecutive time steps (*e.g.* the k-th and (k-1)-th steps) are obtained, the differential inductances can be calculated by

$$L_m(i) = \frac{d\psi(k)}{di} = An_1 \frac{B(k) - B(k-1)}{i(k) - i(k-1)} \qquad (1)$$

where A is the cross-sectional area of transformer core, n_1 is the number of turns of the primary winding, and B is the flux density.

From (1), the differential inductance at different winding currents can be obtained and shown in Fig. 3. The leakage inductances, L_{1s} and L'_{2s}, can be assumed as constant.

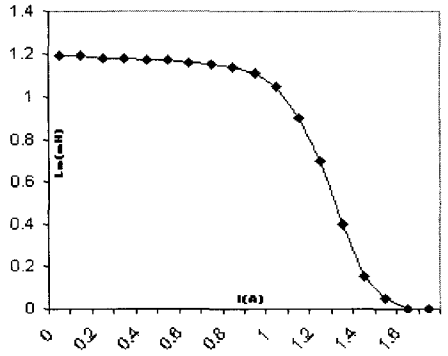

Fig. 3. Differential inductance with different winding currents

2.3 Consideration of anomalous loss

The anomalous loss P_a of magnetic core can be obtained by [1]

$$P_a = C_a \left| \frac{dB}{dt} \right|^{3/2} \qquad (2)$$

where C_a is the coefficient of anomalous loss.

Fig. 4 illustrates the core loss curves of FP40 provided by the manufacturer. By curve fitting, C_a can be obtained.

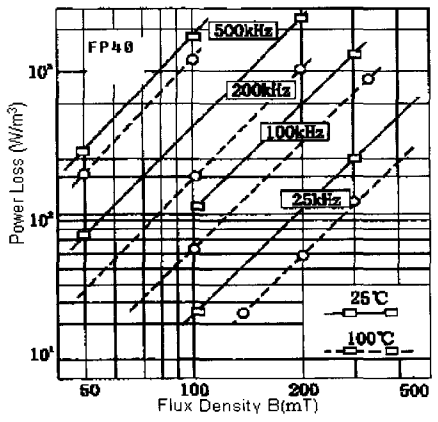

Fig. 4. Core loss curves of soft magnetic core - FP40

For a transformer with symmetrical structure, considering that the voltages across R_1 and L_{1S} or R'_{2s} and L'_{2s} are very small comparing to U_1 and U'_2, the following equations can be obtained:

$$R'_a \approx \frac{(n_1 A)^{3/2}}{C_a w} |U_1|^{1/2}; \quad PWM = ON \qquad (3)$$

$$R'_a \approx \frac{(n_1 A)^{3/2}}{C_a w} |U'_2|^{1/2}; \quad PWM = OFF \qquad (4)$$

where w is the mass of the core.

2.4 Phase variable model

The phase variable model for the transformer of flyback switching AC-DC converter is given as

$$U_1 = (R_1 i_1 + L_{1s}\frac{di_1}{dt}) + L_m \frac{di}{dt} \quad (5)$$

$$U_2' = -[(R_{2s}' i_2' + L_{2s}'\frac{di_2'}{dt}) + L_m \frac{di}{dt}] \quad (6)$$

$$i = i_1 + i_2' - L_m \frac{di}{dt} / R_a' \quad (7)$$

where L_{1s}, L_m and L'_{2s} can be obtained from the nonlinear FE solutions, in which the saturation effect is considered, and R'_a, which relies on the voltage across L_m, is obtained from (2)-(4).

3. Dynamic Simulation Model for Flyback Switching DC-DC Converters

Based on the analysis and circuit models obtained in Section 2, the hybrid dynamic simulation model for flyback switching DC-DC converters is built. It has two level structures: the top level is a digital system instituted by all the switching parts and some other pure parts with switching characteristic, and the second level is a continuous system instituted by all passive components.

3.1 Simulation model of transformer

According to (2)-(4), the anomalous loss coefficient C_a and the equivalent loss resistance R'_a can be obtained. C_a is determined as 5 x 10^{-5}. R'_a relies on the winding current and voltage and its corresponding simulation block is a MATLAB function. The differential inductance L_m can be obtained by the method of look-up table, in which the data of differential inductance versus current have been preset. As there is a RCD circuit in the primary winding, the stray capacitance of C_{str} can be omitted here. Fig. 5 shows the simulation model of transformer considering anomalous loss and differential inductance.

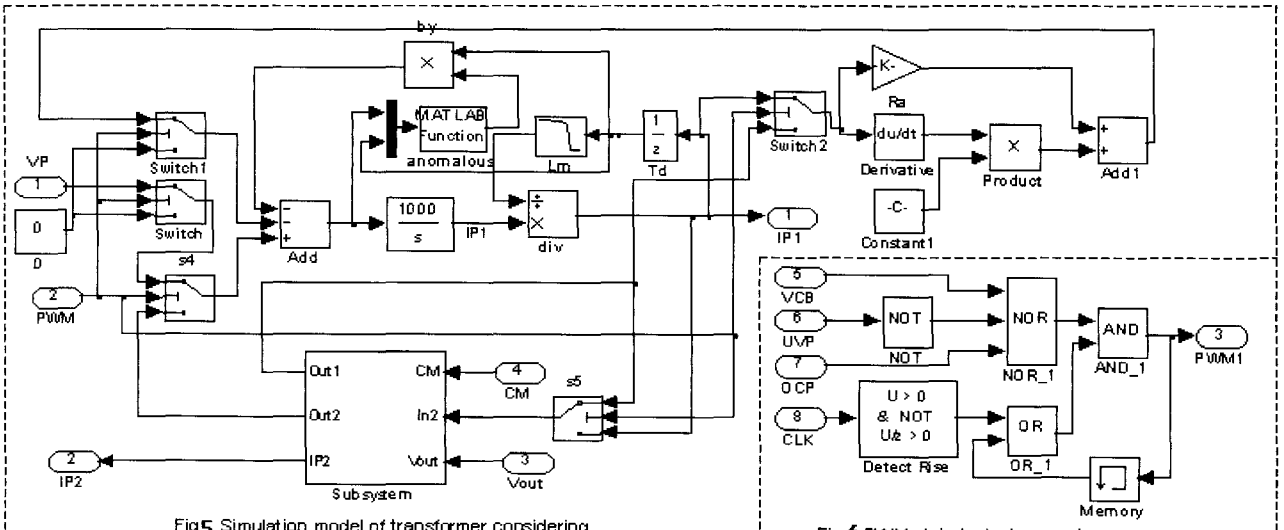

Fig5 Simulation model of transformer considering differential inductance and anomalous loss

Fig 6 PWM state logical generator

3.2 Pulse width modulation (PWM)

According to the principle of flyback switching converters, the PWM state is decided by

$$PWM^{n+1} = (CLK \uparrow + PWM^{n}) \& \overline{(VCB^{n} + UVP^{n} + OCP^{n})} \quad (8)$$

where VCB is the logical state of output voltage, which is true when the output voltage is larger than the rated, otherwise false; UVP is the logical state of UC3842, which is true when the UC3842 works and produces a PWM signal, otherwise false; OCP is the logical state of over current protection, which is true when the UC3842 operates in the over current protection mode, otherwise false; and CLK↑ is the rise of time clock. The corresponding simulation model is shown in Fig. 6. Based on (1)-(8), the complete simulation model of flyback converter is obtained.

4. Simulation of an Existing Converter

The simulation model is applied to analyze an existing flyback DC-DC converter, as shown in Fig. 7. The major parameters include: input voltage of 102-370 VDC, nominal output voltage

of 5 VDC, rated output current of 3.6 A, and switching frequency of 60 kHz. The transformer is E25/FP40. By using the proposed model, some performances of the converter are obtained.

Fig. 8(a) illustrates the simulated operation process of the converter with the rated load when V_{in}=102 VDC, and Fig. 8(b) plots the enlarged steady state. The simulation results show that the basic nominal requirements of the converter can be met. According to Figs. 9 and 10, it can be seen that when the input voltage rises, the output capacity and anomalous loss increase if the output keeps constant, *e.g.* the rated load.

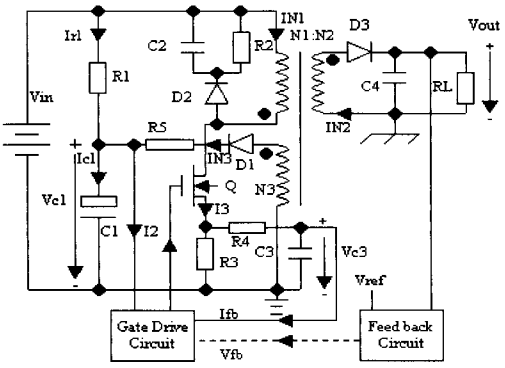

Fig. 7. Circuit topology of the flyback converter

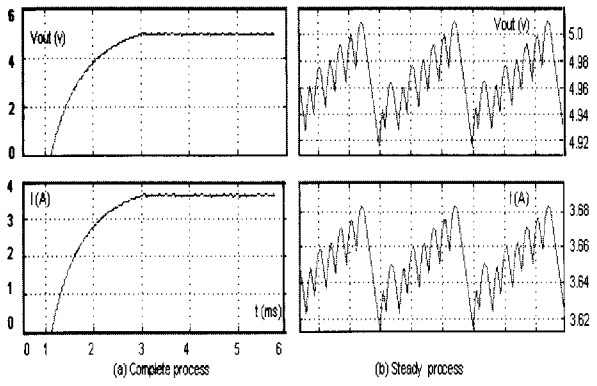

Fig. 8. Simulation results by using the phase variable transformer model with the rated load.

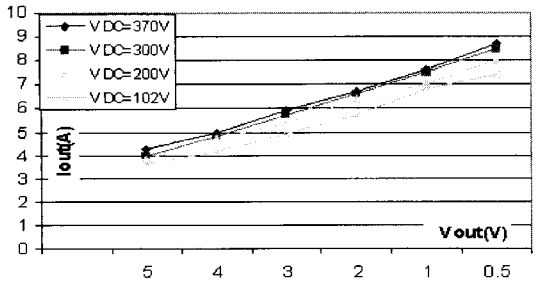

Fig. 9. Natural output curves of flyback converter at different input voltages.

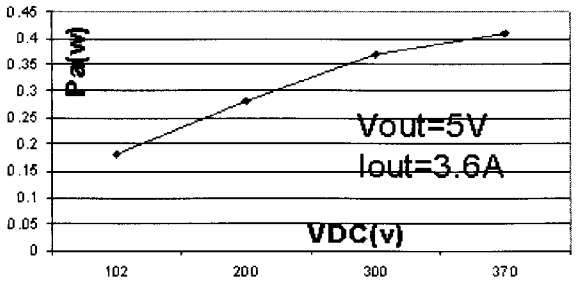

Fig. 10. Anomalous loss at different input voltages

5. Conclusion

This paper presents a generalized dynamic model for flyback switching DC-DC converters. In this model, a modified phase variable transformer model and several important factors are taken into account. The systematic method to build the hybrid model - system switching state based on time sequence is also introduced. The proposed simulation model is implemented in MATLAB/Simulink and applied to analyze an existing flyback DC-DC converter. The model is verified by the simulation results.

References

[1] J. G. Zhu and V. S. Ramsden, "A generalized dymanic circuit model of magnetic cores for low- and high-frequency application - Part I: theoretical calculation of the equivalent core loss resistance," *IEEE Trans. Power Electronics*, Vol. 11, No. 2, pp. 246-250, 1996.

[2] H. Y. Lu, J. G. Zhu and V. S. Ramsden, "Dynamic circuit modeling of a high frequency transformer," *Proc. IEEE Power Electronics Specialists Conf.*, Fukuoka, Japan, pp. 1497-1485, 1998.

[3] J. X. Chen, J. G. Zhu, Y. G. Guo and J. X. Jin, "Modeling and simulation of flyback DC-DC converter under heavy load," *Proc. Int. Conf. on Communication, Circuits and Systems*, Guilin, China, pp. 2752-2756, 2006.

[4] J. X. Chen, "Energy self-holding in flyback switching DC-DC converters," *Proc. Int. Conf. Electrical Machines and Systems*, Nanjing, China, pp. 1194-1197, 2005.

Received: 20 July 2006/Revised: 31 January 2007